WELD

GENERAL NOTES

1. THIS PLAN IS DEVELOPED FROM REFERENCES NO. 1 AND 2.
2. LONGITUDINAL DISTANCES ARE MEASURED ALONG THE VESSEL'S KEEL LINE AND REFERENCED FROM THE SHIP'S AFTER PERPENDICULAR WHICH IS LOCATED AT FRAME 72.
3. KEEL BLOCKS:
   a. KEEL BLOCKS ARE LOCATED AS SHOWN BETWEEN DELAWARE II FRAMES 11 AND 68 ON 4'-0" CENTERS AND ARE 15" WIDE BY 48" LONG. ADDITIONAL KEEL BLOCKS SHALL BE PLACED BETWEEN FRAMES 28-32, FRAMES 34-38 AND FRAMES 52-56 IMMEDIATELY AFTER THE DRYDOCKING. THESE BLOCKS SHALL BE PLACED CLEAR OF ALL HULL PENETRATIONS AND PROJECTIONS. THEY SHALL BE PLACED NO MORE THAN 4'-0" APART.
   b. KEEL BLOCKS ARE TO HAVE A MINIMUM OF 2" SOFT WOOD CAP.
4. SIDE BLOCKS:
   a. SIDE BLOCKS ARE LOCATED BETWEEN DELAWARE II FRAMES 20 AND 60 ON 12'-4" CENTERS AND ARE 28" LONG BY 12" WIDE.
   C1 b. SIDE BLOCKS ARE TO HAVE SOFT WOOD CAPS OF 2" MINIMUM THICKNESS. FOR HEIGHTS AND LOCATIONS SEE "TABLE OF OFFSETS FOR SIDE BLOCKS" AND ACCOMPANYING DETAILS. HEIGHTS OF SIDE BLOCKS GIVEN ARE ABOVE THE MOLDED KEEL IN FEET-INCHES-SIXTEENTHS. THE BALLAST KEEL EXTENDS 18 INCHES BELOW THE MOLDED KEEL.
   c. LINE OF FORCE SHALL LIE WITHIN THE MIDDLE ONE-THIRD SIDE BLOCK.
   d. SIDE BLOCKS ARE NUMBERED FROM AFT TO FORWARD WITH BLOCK FURTHEST AFT AS NO. 1.
5. B2 DOCKING CONDITION FOR THIS ARRANGEMENT:
   DISPLACEMENT 939.8 LT.
   MEAN BASELINE DRAFT (S.W.) 16'-6"
6. FOR DRAFT READING CORRECTIONS SEE REFERENCE NO. 3, APPENDIX A; DRAFT MARKS VERIFICATION REPORT.
7. FOR LOCATIONS OF BITTS AND CHOCKS SEE REFERENCE NO. 4.

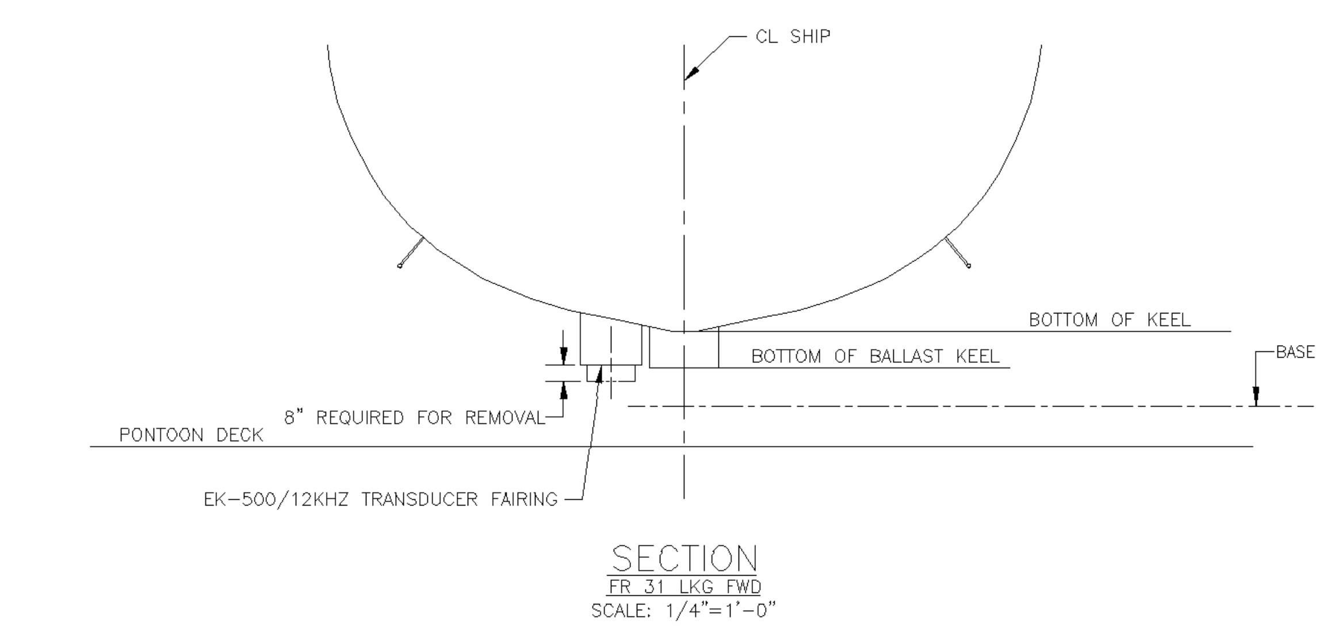

SECTION
FR 31 LKG FWD
SCALE: 1/4"=1'-0"

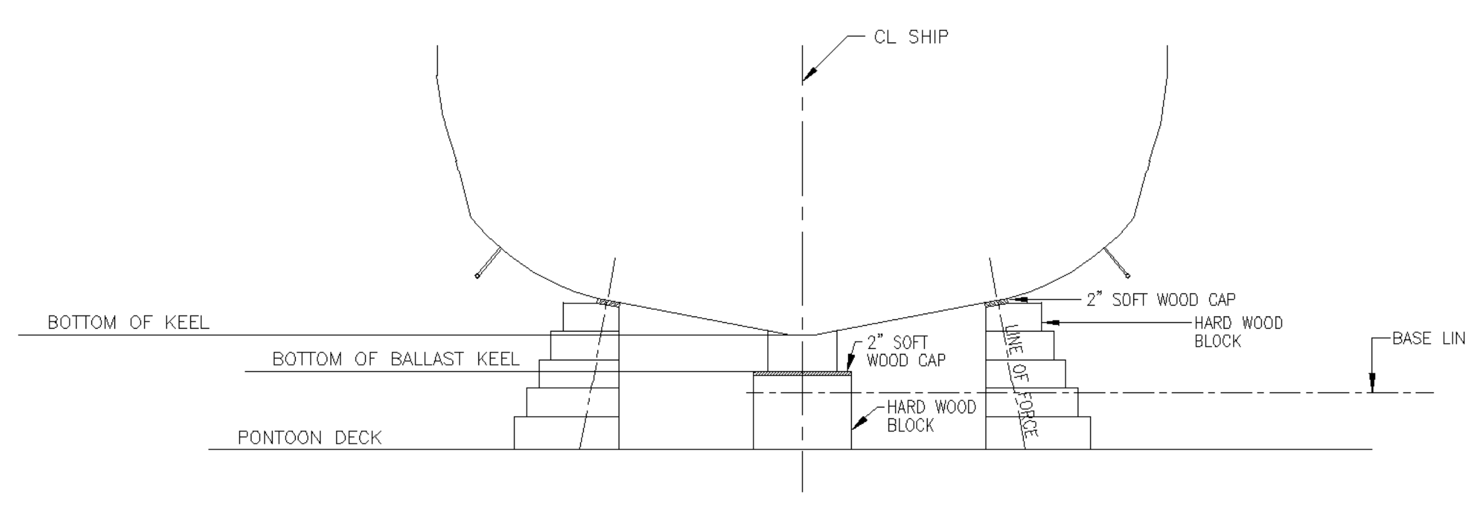

SECTION
TYPICAL KEEL AND SIDE BLOCKS AND BALLAST KEEL
FR 60 SHOWN - LKG FWD
SCALE: 1/4"=1'-0"

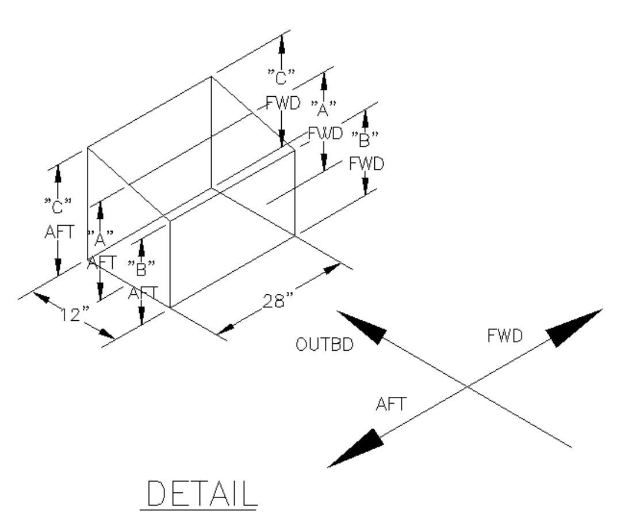

DETAIL
SCALE: NONE

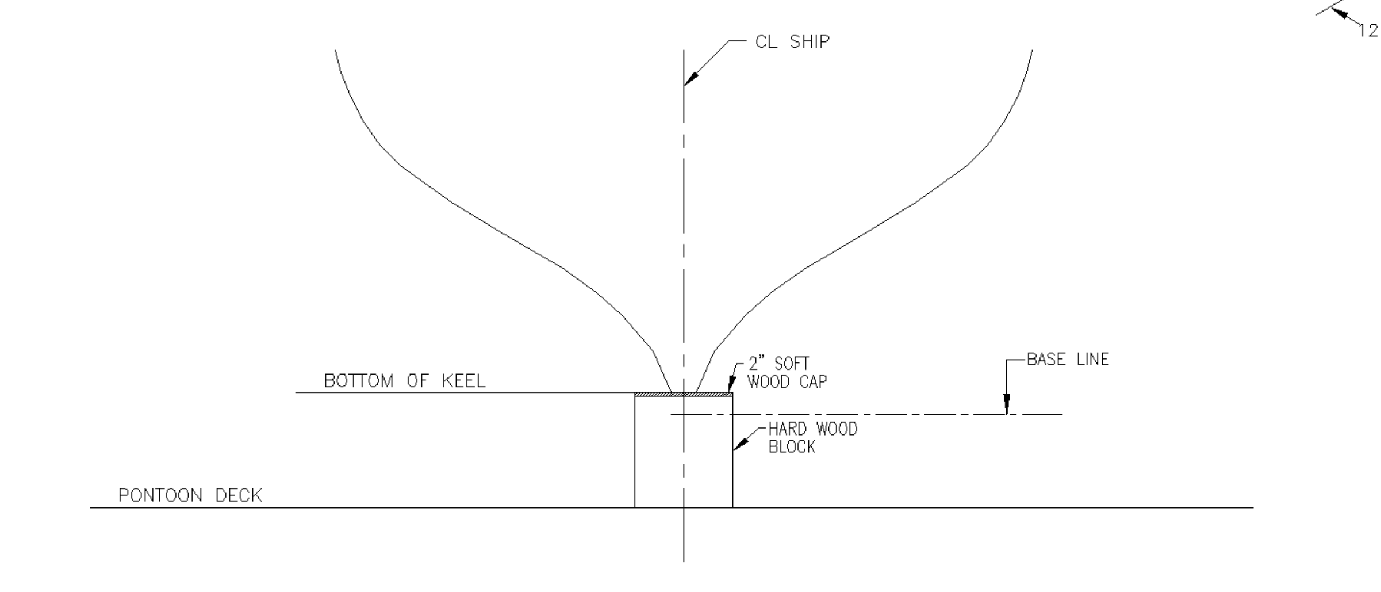

SECTION
TYPICAL KEEL BLOCK (NO FLAT KEEL
FR 60 SHOWN - LKG FWD
SCALE: 1/4"=1'-0"

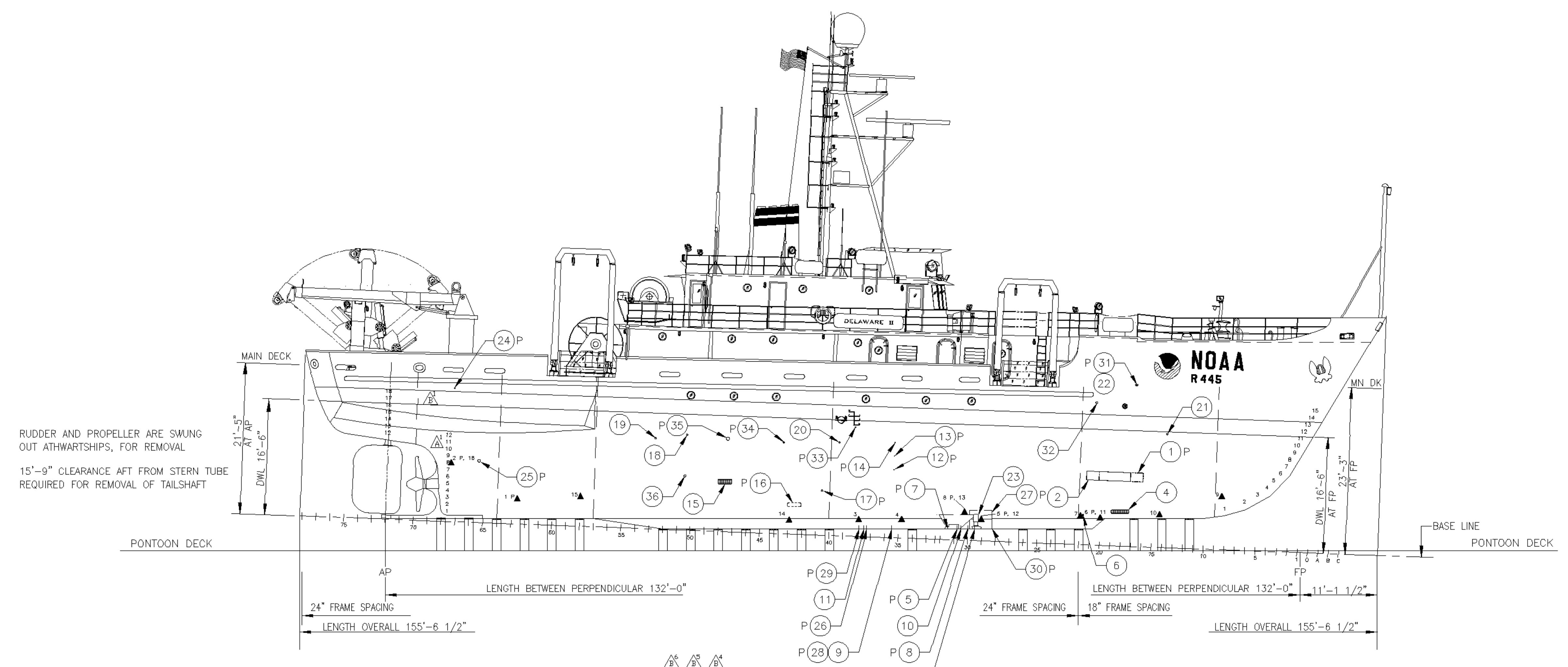

RUDDER AND PROPELLER ARE SWUNG OUT ATHWARTSHIPS, FOR REMOVAL

15'-9" CLEARANCE AFT FROM STERN TUBE REQUIRED FOR REMOVAL OF TAILSHAFT

ELEVATION
SCALE: 1/8"=1'-0"

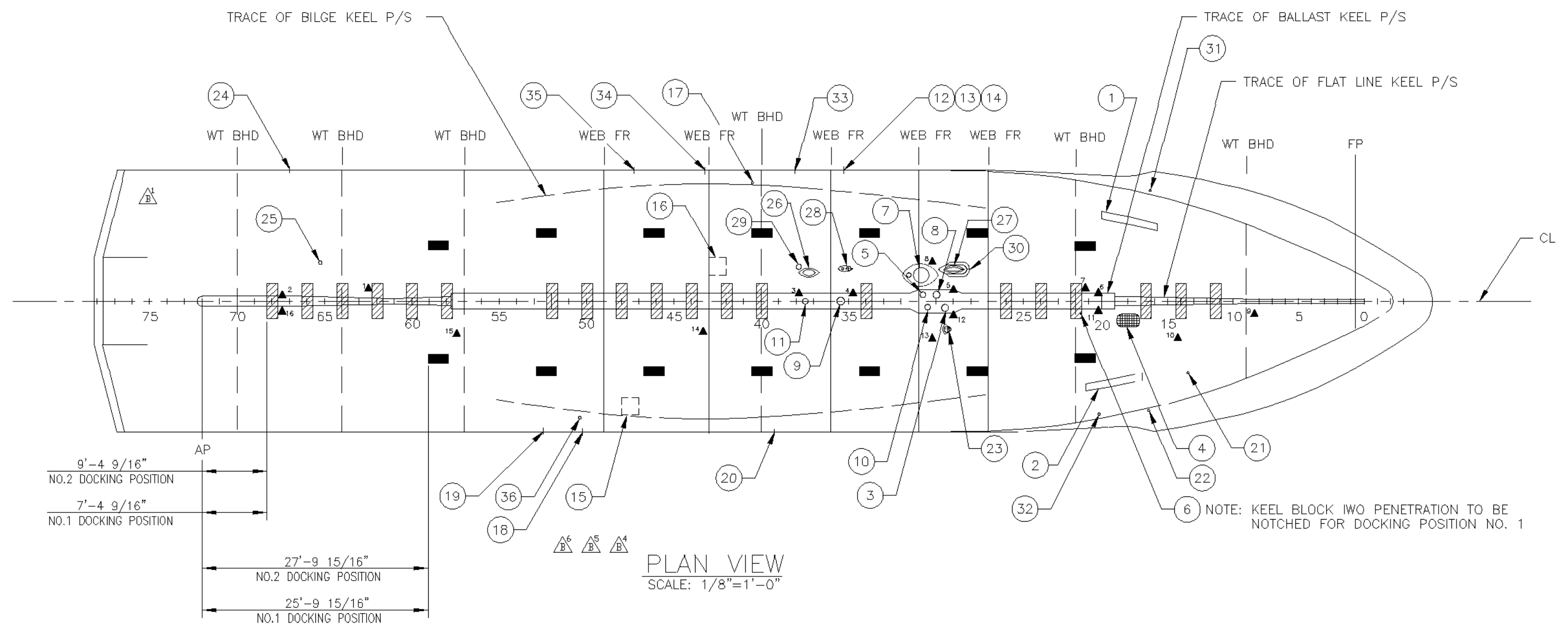

NOTE: KEEL BLOCK IWO PENETRATION TO BE NOTCHED FOR DOCKING POSITION NO. 1

PLAN VIEW
SCALE: 1/8"=1'-0"

TABLE OF OFFSETS FOR SIDE BLOCKS
INTERVALS GIVEN IN INCREMENTS OF 12'-4"

DOCKING POSITION NO. 1 - AFTER END OF NO. 1 KEEL BLOCK 7'-4 9/16" FWD AP

BLOCK NO.	SIDE OF SHIP	AFT END FWD OF AP	POINT "A"		POINT "B"		POINT "C"	
			HALF BR	HEIGHT	HALF BR	HEIGHT	HALF BR	HEIGHT
1	P/S AFT	25-9-15	6-6-0	5-5-6	6-0-0	5-1-14	7-0-0	5-9-0
	P/S FWD	28-1-15	6-6-0	4-9-7	6-0-0	4-5-15	7-0-0	5-0-12
2	P/S AFT	38-1-15	8-0-0	3-4-14	7-6-0	3-1-9	8-6-0	3-7-8
	P/S FWD	40-5-15	8-0-0	3-0-4	7-6-0	2-9-5	8-6-0	3-2-13
3	P/S AFT	50-5-15	8-0-0	1-10-5	7-6-0	1-8-9	8-6-0	2-0-8
	P/S FWD	52-9-15	8-0-0	1-8-4	7-6-0	1-6-11	8-6-0	1-10-6
4	P/S AFT	62-9-15	8-0-0	1-4-4	7-6-0	1-2-13	8-6-0	1-6-1
	P/S FWD	65-1-15	8-0-0	1-4-4	7-6-0	1-2-11	8-6-0	1-6-1
5	P/S AFT	75-1-15	8-0-0	1-8-5	7-6-0	1-6-3	8-6-0	1-10-11
	P/S FWD	77-5-15	8-0-0	1-9-13	7-6-0	1-7-9	8-6-0	2-0-7
6	P/S AFT	87-5-15	8-0-0	2-6-8	7-6-0	2-3-7	8-6-0	2-11-1
	P/S FWD	89-9-15	8-0-0	2-9-9	7-6-0	2-6-2	8-6-0	3-2-10
7	P/S AFT	99-9-15	6-6-0	3-4-0	6-0-0	2-10-12	7-0-0	3-9-6
	P/S FWD	102-2-0	6-6-0	3-11-1	6-0-0	3-5-0	7-0-0	4-5-7

TABLE OF OFFSETS FOR SIDE BLOCKS
INTERVALS GIVEN IN INCREMENTS OF 12'-4"

DOCKING POSITION NO. 2 - AFTER END OF NO. 1 KEEL BLOCK 9'-4 9/16" FWD AP

BLOCK NO.	SIDE OF SHIP	AFT END FWD OF AP	POINT "A"		POINT "B"		POINT "C"	
			HALF BR	HEIGHT	HALF BR	HEIGHT	HALF BR	HEIGHT
1	P/S AFT	27-9-15	6-6-0	4-10-9	6-0-0	4-7-1	7-0-0	5-1-15
	P/S FWD	30-1-15	6-6-0	4-3-5	6-0-0	3-11-13	7-0-0	4-6-6
2	P/S AFT	40-1-15	8-0-0	3-0-14	7-6-0	2-9-14	8-6-0	3-3-7
	P/S FWD	42-5-15	8-0-0	2-8-13	7-6-0	2-6-1	8-6-0	2-11-4
3	P/S AFT	52-5-15	8-0-0	1-8-8	7-6-0	1-6-15	8-6-0	1-10-10
	P/S FWD	54-9-15	8-0-0	1-6-13	7-6-0	1-5-5	8-6-0	1-8-14
4	P/S AFT	64-9-15	8-0-0	1-4-4	7-6-0	1-2-11	8-6-0	1-6-1
	P/S FWD	67-1-15	8-0-0	1-4-9	7-6-0	1-2-14	8-6-0	1-6-6
5	P/S AFT	77-1-15	8-0-0	1-9-9	7-6-0	1-7-6	8-6-0	2-0-3
	P/S FWD	79-5-15	8-0-0	1-11-3	7-6-0	1-8-14	8-6-0	2-2-3
6	P/S AFT	89-5-15	8-0-0	2-9-1	7-6-0	2-5-12	8-6-0	3-2-1
	P/S FWD	91-9-15	8-0-0	3-0-11	7-6-0	2-8-15	8-6-0	3-6-5
7	P/S AFT	101-9-15	6-6-0	3-9-15	6-0-0	3-4-0	7-0-0	4-4-3
	P/S FWD	104-2-0	6-6-0	4-6-7	6-0-0	3-11-10	7-0-0	5-1-14

B2 TABLE OF DISPLACEMENT & OTHER PROPERTIES FOR DOCKING

MEAN DRAFT (FT.)	DISPLACEMENT IN SW. (L.TONS)	TRANSVERSE KM (FT)	TONS PER INCH IMMERSION (L.TONS)	MOMENT TO TRIM 1" (FT-TONS)	LONGITUDINAL CENTER OF BUOYANCY AFT OF FP (FT)	LONGITUDINAL CENTER OF FLOTATION AFT OF FP (FT)
12'-0"	513.51	17.48	6.93	52.48	71.21	72.84
12'-6"	555.82	17.43	7.17	57.69	71.37	73.78
13'-0"	599.46	17.41	7.37	62.15	71.57	74.47
13'-6"	644.27	17.46	7.58	66.76	71.80	75.19
14'-0"	690.51	17.71	7.84	72.13	72.05	76.15
14'-6"	738.28	17.98	8.09	77.43	72.35	77.08
15'-0"	787.41	18.23	8.28	81.54	72.66	77.62
15'-6"	837.52	18.36	8.42	85.23	72.97	77.93
16'-0"	888.37	18.43	8.52	88.24	73.25	78.01
16'-6"	939.75	18.46	8.59	90.62	73.51	77.88
17'-0"	991.45	18.45	8.64	92.24	73.73	77.56
17'-6"	1043.36	18.44	8.66	93.62	73.91	77.20
18'-0"	1095.44	18.45	8.69	95.03	74.06	76.85

REVISIONS

REV	ZONE	DESCRIPTION	BY	DATE	APPD
–		INITINAL ISSUE INCORPORATES DOI 461.1-189 DATED 7-19-96			
A	6E –	1. DRAWING WAS REVISED TO ADD ITEMS 24 & 25 TO LIST OF OPENINGS IN SHELL AND IN THE ELEVATION VIEW. THE ABOVE CHANGES WERE DONE WITH THE INCORPORATION OF DO 258 HYDRAULIC COOLING SYSTEM ISSUED BY NOAA.	FSU	4/8/97	
B	ALL –	1. ADDED SPONSONS TO ELEVATION & PLAN VIEW. 2. MODIFIED TABLE OF DISPLACEMENT & OTHER PROPERTIES FOR DOCKING, BEARING ON BLOCKS TABLE, PRINCIPAL DIMENSIONS DISPLACEMENT, & GENERAL NOTE 5 TO SUIT HYDROSTATICS OF HULL WITH SPONSONS. 3. DELETED REFERENCE 5 & ADDED REFERENCE 6. 4. MODIFIED TRANSDUCER LOC & PARTICULARS IAW REFERENCE 6. 5. MODIFIED LOC & PARTICULARS OF OPENINGS IN SHELL TO SUIT SHIPCHECK OF 10 DEC 1999 & MEASUREMENT SURVEY OF 16 DEC 1999. 6. ADDED DOCKING PLUGS LOCATIONS & LIST.	AAA	4/20/00	
C	16-G	1. MODIFIED GENERAL NOTE 4.b.	RAYMOND HERMES	3/28/02	

BEARING ON BLOCKS

SUPPORT	SQ. FT.	SQ. INCH
9 KEEL BLOCKS (15" X 12" KEEL WIDTH)	11.25	1,620
11 KEEL BLOCKS (15" X 22" KEEL WIDTH)	25.21	3,630
7 SIDE BLOCKS (P) (28" X 12", 12'-4" SPACING)	16.33	2,352
7 SIDE BLOCKS (S) (28" X 12", 12'-4" SPACING)	16.33	2,352
TOTAL BEARING AREA	69.12	9,954
AVERAGE BLOCK PRESSURE BASED ON DOCKING DISPLACEMENT OF 931 LT	13.60 LT/SQ.FT.	211.53 LBS/SQ.IN. B2

LIST OF OPENINGS IN SHELL

ITEM NO.	SERVICE	SIZE OF HOLE IN SHELL	OUTER PL PROTECTOR RING	SIDE OF SHIP	FWD	AFT	CTR NEAR FRAME	FWD OF AP	DISTANCE OFF CL OF SHIP	HGT ABV KEEL
1	BOW TRUSTER DISCHARGE	14 3/4"x 80"	–	P	–	–	18	106' 0"	2' 2"	6' 0-1/2"
2	BOW TRUSTER DISCHARGE	14 3/4"x 80"	–	S	–	–	19	107' 6"	2' 9"	6' 0-1/2"
B4 3	RDI ADCP W/GATE VALVE	10"DIA	–	S	–	12"	29	85' 0"	9"	1' 6" BLW
4	BOW THRUSTER SUCTION	24"x31"	–	S	–	–	18	106' 0"	2' 2"	1' 5"
B4 5	NAVIGATION SOUNDER	6 3/4"DIA	–	P	5 1/2"		31	82' 5-1/2"	9"	1'-6" BLW
6	UNCONTAMINATED SEAWATER SUPPLY	1 1/2"DIA	–	S	6"		22	100' 6"	1' 5"	0' 6"
B4 7	EK-500/12KHZ TRANSDUCER	21 7/16"DIA	–	P	3"		31	82' 3"	3' 0"	1' 2" BLW
8	AMETEK DOPPLER SPEED LOG W/GATE VALVE	10"DIA	–	P	–	–	30	84' 0"	9"	1' 6" BLW
9	EK-500/38KHZ TRANSDUCER	11"DIA	–	–	12"		36	73' 0"	0' 0"	1' 6" BLW
B4 10	FURUNO SCANNING DIRECTIONAL SONAR	7 1/2"DIA	–	S	12"		31	83' 0"	9"	1' 6" BLW
11	EK-500/120KHZ TRANSDUCER	7 13/16"DIA	–	P	12"		38	69' 0"	5"	1' 6" BLW
12	SEA SURFACE TEMPERATURE SENSOR	1"DIA	–	P	12"		36	73' 0"	14' 0"	7' 1"
13	SEA SURFACE TEMPERATURE SENSOR	1"DIA	–	P	12"		36	73' 0"	14' 6"	9' 0-1/2"
14	SEA SURFACE TEMPERATURE SENSOR	1"DIA	–	P	12"		36	73' 0"	14' 10"	11' 0"
15	SEA CHEST	24"X 24"	–	S	–	12"	47	49' 0"	12' 0"	6' 10"
16	SEA CHEST	24"X 24"	–	P	–	12"	42	59' 0"	4' 0"	3' 9"
B5 17	OVERBOARD DISCHARGE	3"DIA	–	P	9"	–	41	63' 9*	13' 2"	4' 1"
18	OVERBOARD DISCHARGE	3"DIA	–	S	–	12"	50	43' 0"	15' 0"	12' 1"
19	OVERBOARD DISCHARGE	2 1/2"DIA	–	S	6"	–	53	38' 6"	15' 0"	11' 8"
20	OVERBOARD DISCHARGE	2 1/2"DIA	–	S	–	12"	39	65' 0"	15' 0"	11' 0"
21	OVERBOARD DISCHARGE	3"DIA	–	S	3"	–	14	112' 3"	8' 2"	12' 2"
22	OVERBOARD DISCHARGE	3"DIA	–	S	2"	–	17	107' 8"	12' 6"	19' 3"
B4 23	SIMRAD ITI NETSONDE	8"DIA	–	S	–	12"	29	85' 0"	3' 2"	1' 11" BLW
B5 A1 24	DISCHARGE FOR HYDRAULIC COOLING	1 1/2"DIA	–	P	–	10"	67	9' 2"	15' 0"	18' 11"
25	INTAKE FOR SALT WATER HYDRAULIC COOLING	5"DIA	–	P	–	10"	65	13' 2"	4' 4"	8' 5"
B4 26	SIMRAD EC-810/38KHZ TRANSDUCER	9" X 18"	–	P		12"	37	69' 0"	3' 4"	0' 7" BLW
27	SIMRAD EK-50A/50KHZ TRANSDUCER	6' X 24"	–	P	–	–	29	86' 0"	3' 4"	0' 3"
28	FURUNO CA200B-8B, CA50B-9B TWIN XDCR	5" X 9 1/2"	–	P		5"	35	73' 7"	3' 9"	0' 4" BLW
29	SCANMAR 40KHZ HYDROPHONE	9"DIA	–	P	–	–	38	68' 0"	3' 10"	0' 3"
30	FURUNO CI-35 DSL/130KHZ		–	P	–	–	29	86' 0"	3' 4"	1' 6" BLW
B5 31	OVERBOARD DISCHARGE	3"DIA	–	P	2"	–	17	107' 8"	12' 6"	19' 3"
32	OVERBOARD DISCHARGE	3-1/2"DIA	–	S	5"	–	21	101' 11"	12' 11"	16' 9"
33	OVERBOARD DISCHARGE	1-3/4"DIA	–	P	–	9"	38	67' 3"	15' 0"	13' 2"
34	OVERBOARD DISCHARGE	2-1/2"DIA	–	P	12"	–	44	57' 0"	15' 0"	11' 0"
35	OVERBOARD DISCHARGE	6"DIA	–	P	11"	–	48	48' 11"	15' 0"	11' 7"
36	OVERBOARD DISCHARGE	4"DIA	–	S	11"	–	51	42' 11"	13' 4"	6' 3"

B6 LIST OF DOCKING PLUGS

ITEM NO.	SIDE OF SHIP	FWD	AFT	CTR NEAR FRAME	FWD OF AP	DISTANCE OFF CL OF SHIP	HGT ABV KEEL
1	P	12"	–	63	19' 0"	1' 3"	2'10"
2	P	–	10"	67	9' 2"	0' 9"	7' 4"
3	P	2"	–	38	68' 2"	0' 11"	3-1/2" BLW
4	P	4"	–	35	74' 4"	0' 11"	2-1/2" BLW
5	P	2-1/2"	–	29	86' 2-1/2"	1' 5"	1-1/2" BLW
6	P	13"	–	20	104' 1"	0' 11"	1/2" BLW
7	P	–	5"	21	101' 1"	0' 9"	2-3/4"
8	P	–	7"	30	83' 5"	4' 3"	9-3/4"
9	S	–	7"	8	120' 5"	1' 6"	3' 1-1/2"
10	S	–	6"	14	111' 6"	1' 0"	6"
11	S	13"	–	20	104' 1"	0' 11"	1/2" BLW
12	S	3-1/2"	–	29	86' 3-1/2"	1' 5"	1-1/2" BLW
13	S	–	7"	30	83' 5"	4' 3"	9-3/4"
14	S	–	8"	43	57' 4"	0' 11"	3-1/2" BLW
15	S	–	5"	57	29' 7"	4' 3"	3' 2"
16	S	–	10"	67	9' 2"	0' 9"	7' 4"

B6 LEGEND

SYMBOL	DESCRIPTION
▲	DOCKING PLUG LOCATION

PRINCIPAL DIMENSIONS

LENGTH OVERALL....................155'-6 1/2"
LENGTH BETWEEN PERPENDICULARS....................132'-0"
BEAM (MOLDED)....................30'-0"
DEPTH TO MAIN DECK AMIDSHIPS (MOLDED)....................22'-2 5/16"
DESIGN DRAFT (AMIDSHIPS)....................16'-6"
DISPLACMENT AT DESIGN DRAFT....................940 LT B2

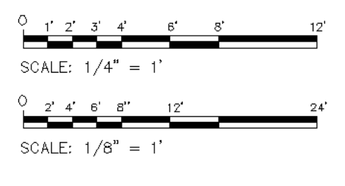

SCALE: 1/4" = 1'

SCALE: 1/8" = 1'

REFERENCES

NO.	TITLE	DWG NO.
B3 6	TRANSDUCER LAYOUT	AMC3-445-461A-01A
5	DELETED	
4	GENERAL ARRANGRMENT/COMP'T & ACCESS	DELA-085-05
3	POST-RTE INCLINING EXPERIMENT REPORT	DELA-097-04
2	LINES PLAN	V-5255 S5-0-2 REV –
1	DOCKING PLAN DELAWARE II	AMC-4000A REV B

FOR	REV	NAME	DATE
NOAA			
ABS			
USCG			
USPHS			

DETYENS SHIPYARDS, INC.
2383 HIGHWAY 41
MT. PLEASANT, S.C. 29464

NATIONAL OCEANIC AND
ATMOSPHERIC ADMINISTRATION
SYSTEMS AQUISITION OFFICE

TIDEWATER
NAVAL ARCHITECTS, Inc.
365 Crawford Parkway, Suite 214, Portsmouth, VA 23704

DELAWARE II (RTE)

DRAWING TITLE

POST - RTE
DOCKING DRAWING

DRAWN K. GARRISON DATE 8-96
CHECKED KDH DATE 8-96
APPROVED DATE
CONTRACT NO. 50-SPNA-5-00051

SIZE H
CAGE CODE OYLJ5
NOAA DRAWING NUMBER DELA-085-04
REV C
SCALE: AS NOTED
SHEET 1 OF 1